SWIVEL COLLECTION

DOUBLE WALL SCONCE



26V1

ABOUT SWIVEL

The tacit knowledge accrued from ten years in lighting has resulted in a light that offers exceptional performance and technical intelligence without sacrificing the meticulously designed decorative fittings for which Articolo are renowned.

Each swivel module is supplied as a complete, factory-configured assembly in a fixed orientation. Modules cannot be reversed or interchanged on site. The correct orientation must be specified at time of order placement.

LEAD TIME

6 - 8 weeks

CERTIFICATION

CE/AU

WARRANTY

3 years

CONFIGURATION

Swivel is available in small, medium, large and extra-large. As a modular fitting, Swivel can be configued in any combination of sizes.

FITTING SIZES

Small
Medium
Large
Extra Large

FITTING FINISHES

Brass
Bronze*

* As Bronze is a hand applied finish the depth of colour will vary

INLAY

Brass Mesh
Bronze Mesh
Silver Mesh
Pecan Leather
Nougat Leather
Titanium Leather

SHADE COLOURS

Clear

SWIVEL COLLECTION

DOUBLE WALL SCONCE

SMALL & SMALL



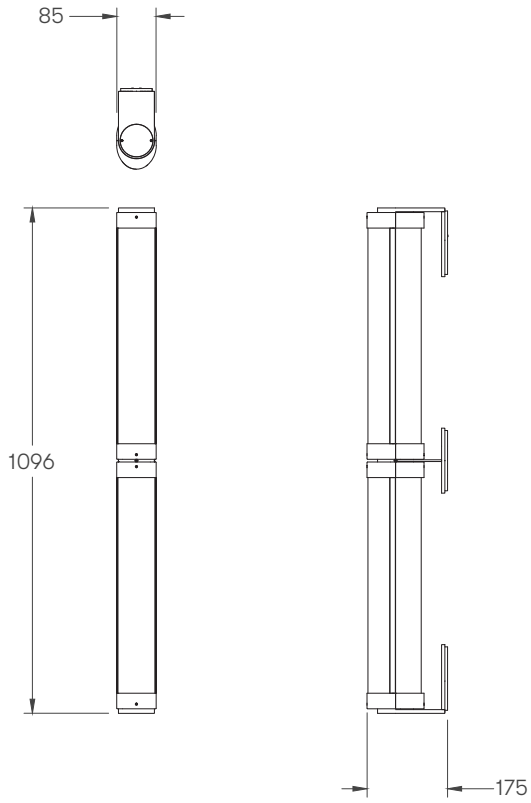

LIGHT SOURCE

2 x 18W LED Board 24V
2700K warm white
3600 total lumen output
Dimmable

INSTALLATION

Supplied with external driver

WEIGHT

8.6kg

MEDIUM & MEDIUM



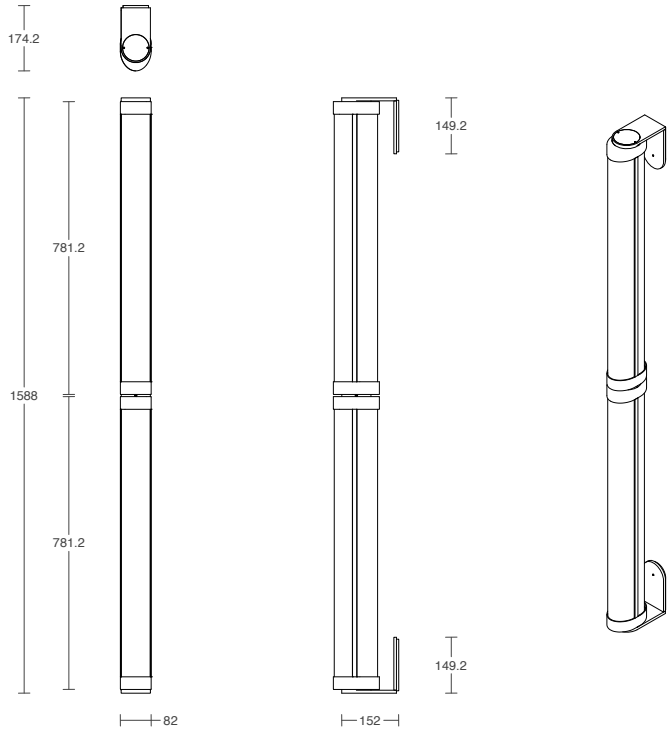

LIGHT SOURCE

2 x 26W LED Board 24V
2700K warm white
5200 total lumen output
Dimmable

INSTALLATION

Supplied with external driver

WEIGHT

15kg

SWIVEL COLLECTION

DOUBLE WALL SCONCE

SMALL & LARGE



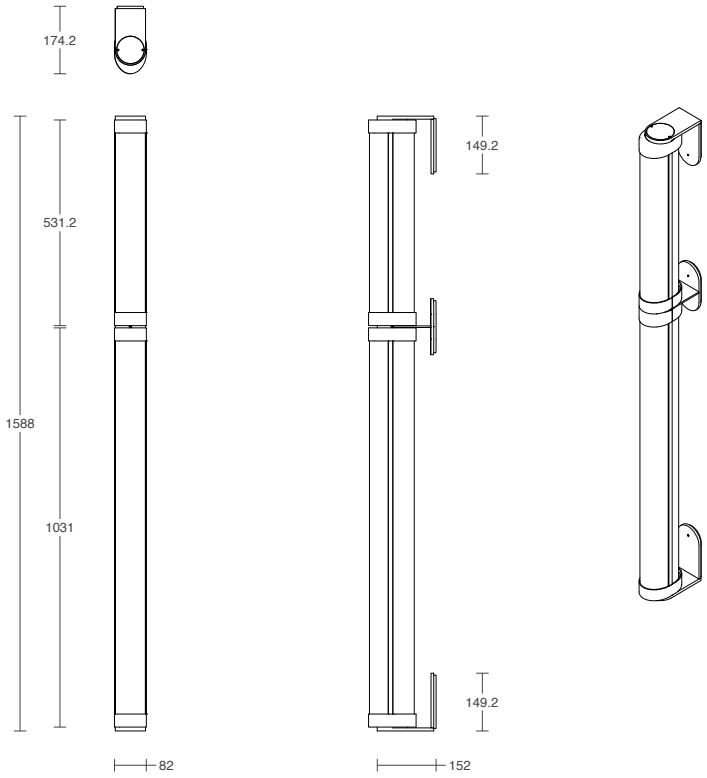

LIGHT SOURCE

3 x 18W LED Board 24V
2700K warm white
5400 total lumen output
Dimmable

INSTALLATION

Supplied with external driver

WEIGHT

10.3kg

MEDIUM & LARGE



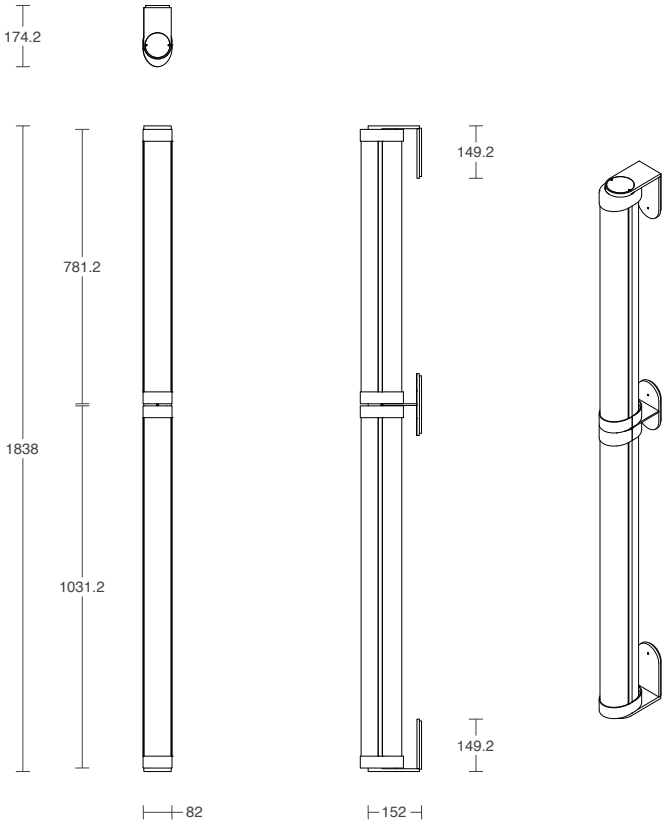

LIGHT SOURCE

1 x 26W LED Board 24V
2 x 18W LED Board 24V
2700K warm white
6200 total lumen output
Dimmable

INSTALLATION

Supplied with external driver

WEIGHT

16kg